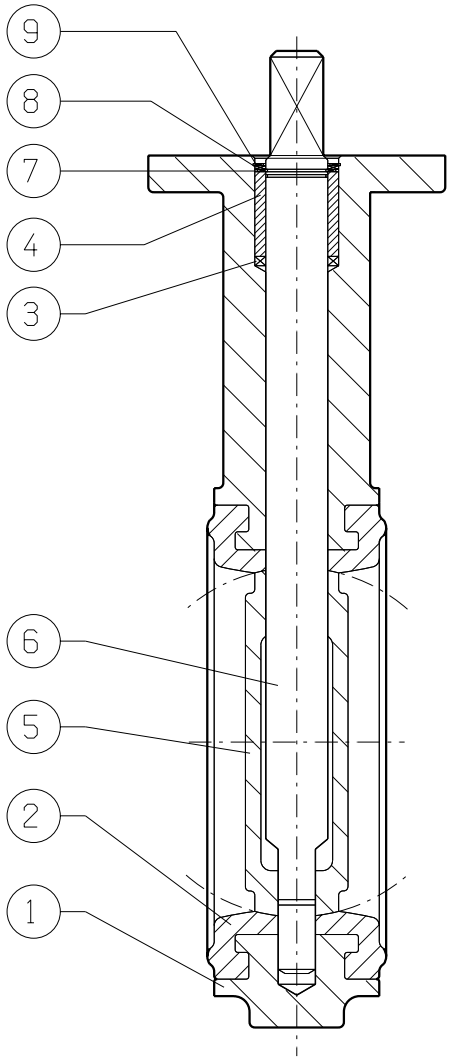

	Item	Qty	Id. no	Description	Spare part	Material
		*	A41171	REPAIR SET	BRA 50257	
A	9	1	*	RETAINING RING	*	STAINLESS STEEL
	8	1	*	THRUST WASHER	*	BRONZE
	7	2	*	STEM RETAINER	*	BRONZE
	6	1	A41170	STEM	BRA 69810	SS304
	5	1	A41169	DISC	BRA 69610	ALU. BRONZE
	4	1	*	BUSHING	*	ACETAL
	3	1	*	PACKING	*	NBR
	2	1	A41168	SEAT	BRA 50210	NBR
B	1	1		BODY	NO	DUCTILE IRON

Dim & tolerance	Upper limit	Lower limit
Permissible deviations for dimensions with a tolerance indication		
Surface roughness in Ra (m)		
Fill. & edg. not dim.	Fillets	Edges

Permissible deviations for dimensions without a tolerance indication

Linear dimension or shortest leg of an angle		Machined: Tolerance		Welded: Tolerance	
		linear	angle	linear	angle
over	to				
	6	± 0.1	± 0.5°	± 1	± 0.6°
6	30	± 0.2			
30	120	± 0.3	± 0.4°		
120	315	± 0.5	± 0.3°	± 1.5	
315	1000	± 0.8	± 0.2°	± 2	± 0.5°
1000	2000	± 1.2		± 3	± 0.3°
2000	4000	± 2		± 4	
4000	8000	± 3		± 5	

R.	Zone	R.O.no.	Sign./Date	Ctrl
B		Revised	ENy/17Jan07	
A		Revised	ENy/13May03	

This drawing is our property. It is not to be traced, copied or published without our written consent, nor to be misused in any way.

Project. used | Original Scale: –

Status	Sign.	Date
Constr.	SSY	19Sep01
Drawn by	EN	19Sep01
Checked	SSY	19Sep01
Prot. rel.		
Prod. rel.	SSY	19Sep01

FRAMO Frank Mohn AS

BASIC VALVE
30/31-35U
SIZE 350 ST

Weld. drg./Cast. drg.

Replaces:

0294-1150-3

Replaced by: