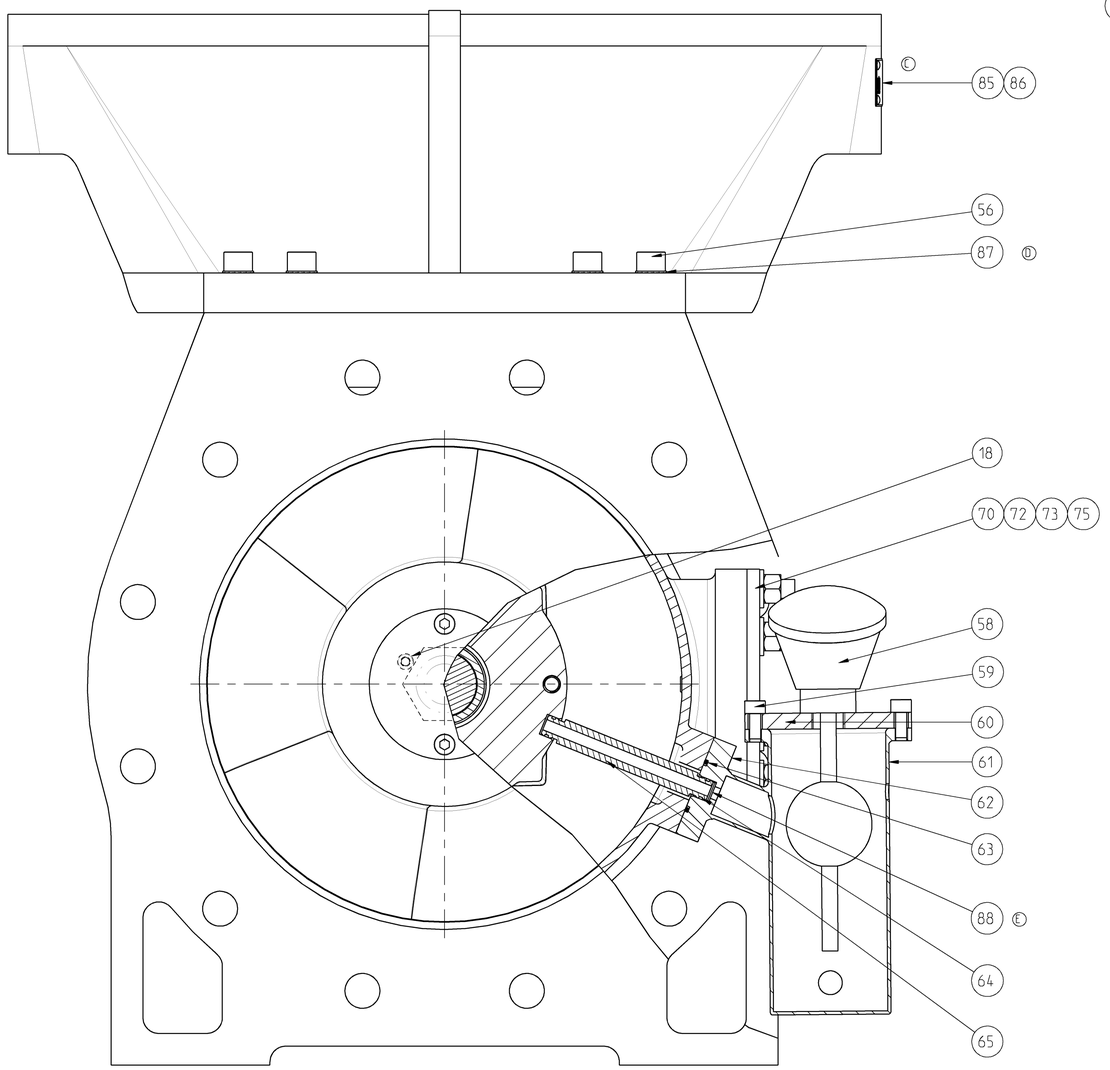

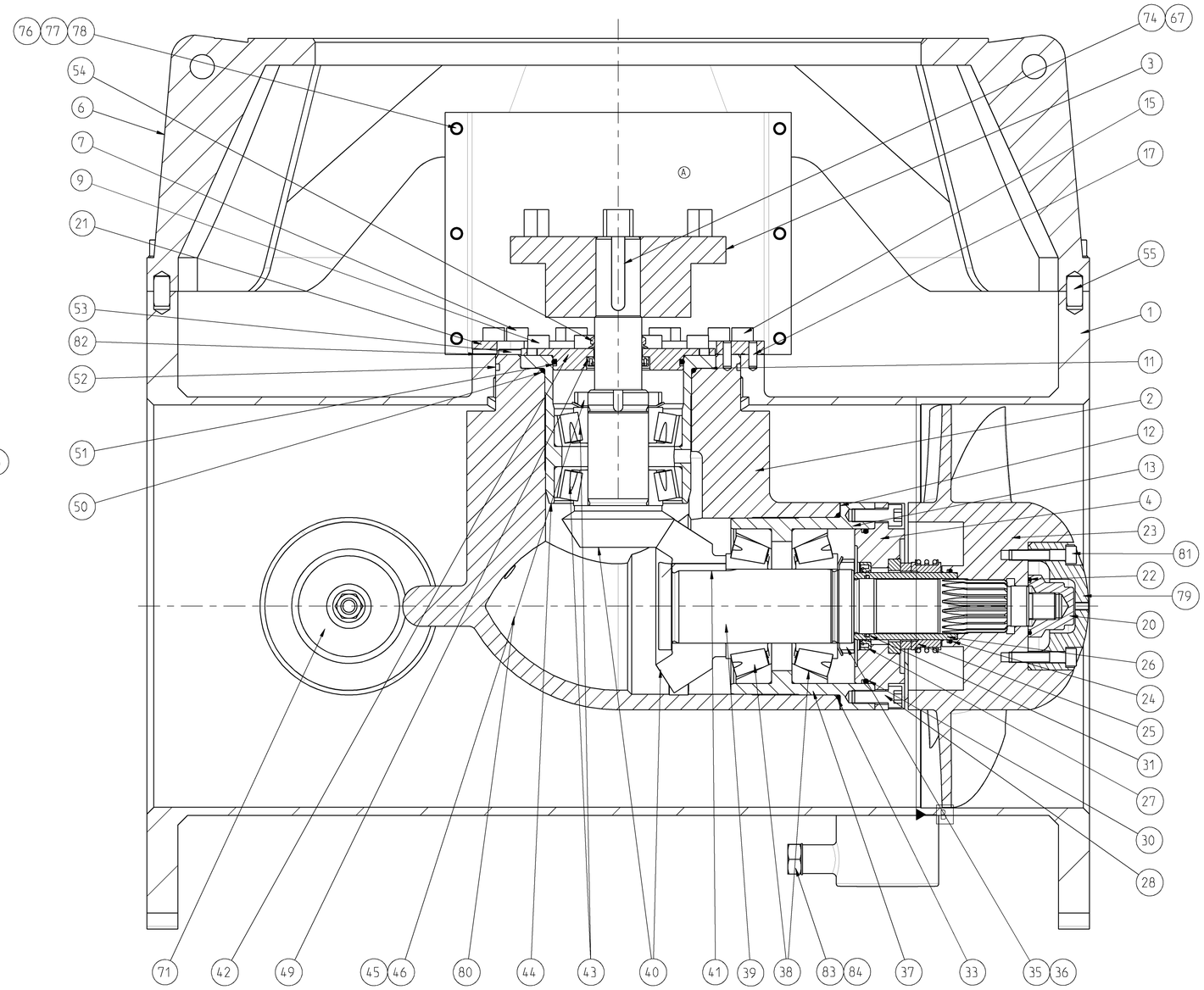

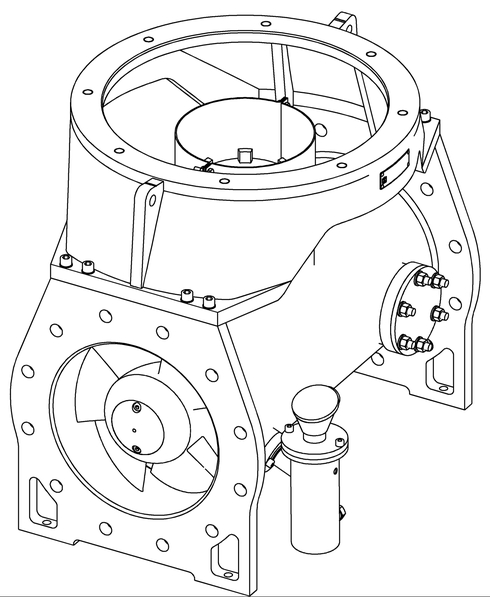

Permissible deviations for dimensions without a tolerance indicaton							
			Linear dimension or shortest leg of an angle		Machined: Tolerance		Welded: Tolerance	
Dim & tolerance	Upper Limit	Lower Limit	over	to	Linear	angle	Linear	angle
Permissible deviations for dimensions with a tolerance indication				6	± 0.1	± 0.5°	± 1	± 0.6°
			6	30	± 0.2			
			30	120	± 0.3	± 0.4°		
Surface roughness in Ra (µm)			120	315	± 0.5	± 0.3°	± 1.5	
			315	1000	± 0.8		± 2	± 0.5°
			1000	2000	± 1.2	± 0.2°	± 3	± 0.3°
Fill. & edg. not dim.	Fillets	Edges	2000	4000	± 2		± 4	
			4000	8000	± 3		± 5	

R.	Zone	R.O.no.	Sign./Date	Ctrl
E	D8	E-6046	AJG/18Jun07	HR
D	G8	E-5957	AJG/29Mar07	HR
C	H8	E-5741	AJG/16Okt06	
B		Revised	AJG/09Sep05	
A	G3	E-4162	AJG/08Sep03	

Item	Qty	Id. no.

This drawing is our property. It is not to be traced, copied or published without our written consent, nor to be misused in any way.

1:2

Proj. type | Scale

Drw. no./Type		
Status	Sign.	Date
Constr.	AJG	26apr02
Drawn by		
Checked		
Prot. rel.		
Prod. rel.	AJG	24may02

Drw. no./Type

FRAMO Frank Mohn AS

PUMP HEAD
RBP300-3
Vertical

Material

Weld. drw./Cast. drw.

Replaced by:

Replaces:

0388-0306 -1

0 10 20 30 40 50 60 70 80 90 100

Valid for original scale 1:1